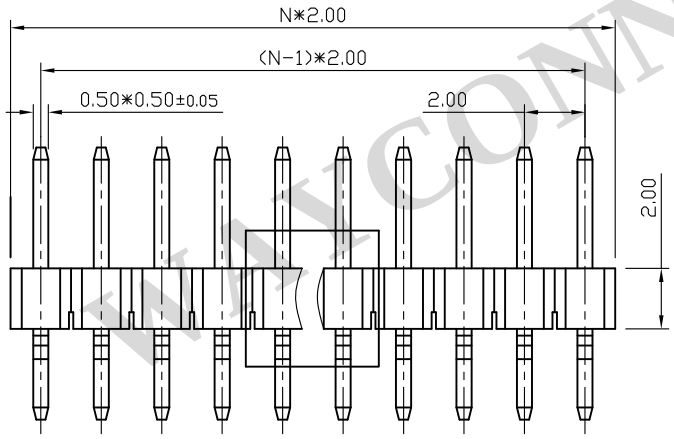

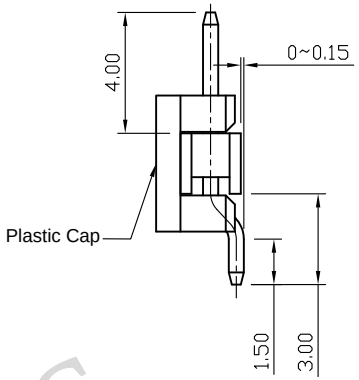

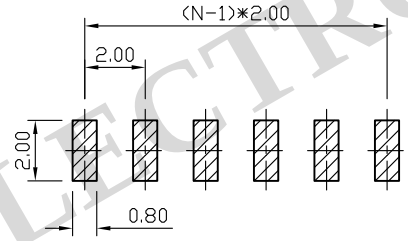

RECOMMEND PCB LAYOUT(TOLERANCE=±0.05)

1. MATERIAL
   1.1 INSULATOR: THERMOPLASTIC (UL 94V-0).
   1.2 CONTACT MATERIAL: COPPER ALLOY.
2. SPECIFICATION
   2.1 CURRENT RATING: 1.5 Amp.
   2.2 INSULATION RESISTANCE: 1000mΩ Min.
   2.3 DIELECTRIC WITHSTANDING: 600VAC.
   2.4 CONTACT RESISTENCE: 20mΩ Max.
   2.5 OPERATING REMPERATURE: -40°C TO +105°C.
3. PLASTIC WITHSTAND TEMP
   3.1 MAX PROCESSING TEMP:
      180°C FOR 30-60 SEC; (200°C FOR 5-10 SEC.) - PBT
      230°C FOR 30-60 SEC; (260°C FOR 5-10 SEC.) - PA6T

PH 200 - XXX - X X X GX - 04

Gender
P=Pin Header
F=Female Header

Pitch
0.80=080
1.00=100
1.27=127
2.00=200
2.54=254

No. of PINS
1 x 01 ~ 1 x 40 PINS
2 x 01 ~ 2 x 40 PINS
3 x 01 ~ 3 x 40 PINS

Connector Type
S=Straight
R=Right Angle
M=SMT

Plating Standard:
G0: Gold Flash
G2: 1U" Gold
G3: 3U" Gold
G4: 5U" Gold
G5:10U" Gold
G6: 15U"
Gold SN:Tin

Packing Style
1. Loose in Bag
2. Tape & Reel
3. Tube

Insulator Material
1: PBT
2: PA6T
3: PA9T
4: LCP

PRODUCT TITLE:	2.00mm SMT Pin Header, Right Angle, Single Row			
UNLESS OTHERWISE SPECIFED TOLERANCES	SCALE:1/1	UNIT: mm		PH200-1XX-MXXG0-04 w/ Pick Up Cap
	SIZE: A3	PAGE:1 OF 1	RAV.A01	
DECIMALS: X :±0.5 X.X :±0.3 X.XX :±0.2 ANGLES: X :±6° X.X :±3° X.XX :±2°	WAYCONN ELECTRONICS			

WAYCONN ELECTRONICS