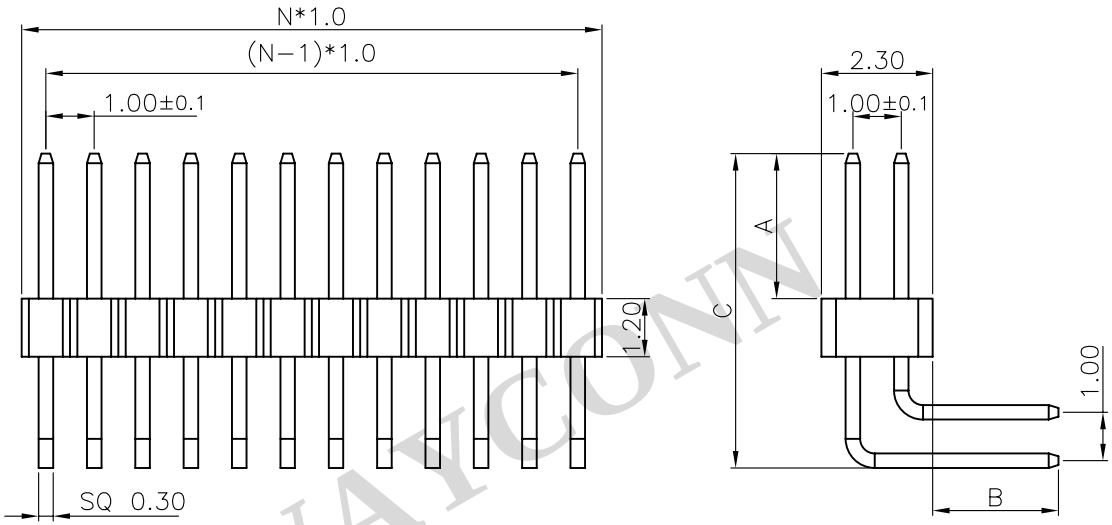

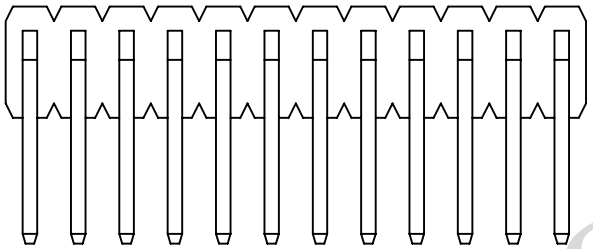

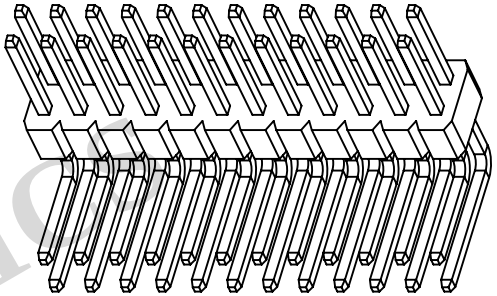

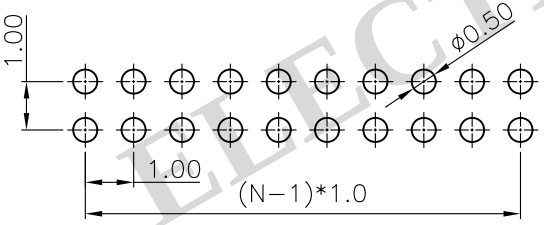

RECOMMEND PCB LAYOUT(TOLERANCE=±0.05)

1. MATERIAL
1.1 INSULATOR: THERMOPLASTIC (UL 94V-0).
1.2 CONTACT MATERIAL: COPPER ALLOY.
2. SPECIFICATION
2.1 CURRENT RATING: 1.0 Amp.
2.2 INSULATION RESISTANCE: 500mΩ Min.
2.3 DIELECTRIC WITHSTANDING: 600VAC.
2.4 CONTACT RESISTENCE: 20mΩ Max.
2.5 OPERATING REMPERATURE: -40°C TO +105°C. 3. PLASTIC WITHSTAND TEMP
3.1 MAX PROCESSING TEMP:
180°C FOR 30-60 SEC; (200°C FOR 5-10 SEC.) - PBT
230°C FOR 30-60 SEC; (260°C FOR 5-10 SEC.) - PA6T

PH 100 - XXX - X X X GX - 07

Gender
P=Pin Header
F=Female Header

Pitch
0.80=080
1.00=100
1.27=127
2.00=200
2.54=254

No. of PINS
1 x 01 ~ 1 x 40 PINS
2 x 01 ~ 2 x 40 PINS
3 x 01 ~ 3 x 40 PINS

Connector Type
S=Straight
R=Right Angle
M=SMT

Plating (Standard: G0)
G0: Gold Flash
G2: 1U" Gold
G3: 3U" Gold
G4: 5U" Gold
G5: 10U" Gold
G6: 15U" Gold
SN:Tin

Packing Style
1. Loose in Bag
2. Tape & Reel
3. Tube

Insulator Material
1: PBT
2: PA6T
3: PA9T
4: LCP

PRODUCT TITLE:	1.00mm Pitch Pin Header, Thru-Hole, R/A, Dual Row			
UNLESS OTHERWISE SPECIFED TOLERANCES	SCALE:1/1	UNIT: mm		PH100-2XX-RXXG0-07
	SIZE: A3	PAGE:1 OF 1	RAV.A01	
DECIMALS: X :±0.5 X.X :±0.3 X.XX :±0.2 ANGLES: X :±6° X.X :±3° X.XX :±2°	WAYCONN ELECTRONICS			

WAYCONN ELECTRONICS